4" FLANGE FRAME LOUVER SPECIFICATION SHEET

LLOYD INDUSTRIES INC.
WWW.FIREDAMPER.COM

EXTRUDED ALUMINUM LOUVER

MODEL: 4-SRF

IMPACT RESISTANT LOUVER
Miami Dade Approved-NOA No. 12-0207.04

APPLICATION

The 4-SRF Stationary Louver is 4" deep with a Flange Frame. That is designed for the protection of high air intake and exhaust velocities in building exterior walls. The 4-SRF is AMCA STD 500 approved.

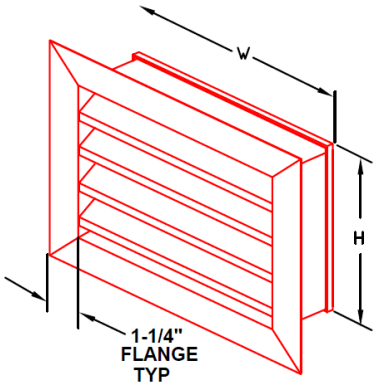

SPECIFICATIONS

Frame:	0.081 thick extruded aluminum 6063-T5 mill finish
Blade:	0.081 thick extruded aluminum 6063-T5 mill finish
Blade Spacing:	Approximately 3-1/4" center to center (except at head and sills)
Fasteners:	10" x 3/4" tek screws
Blade Angle:	36º
Screen:	Bird screen 1/2"×1/2" galvanized steel
Flange:	1-1/4"

OPTIONS

Insect Screen 1/16" x 1/16" Aluminum
Bird Screen 1/2" x 1/2" Aluminum

Finish:	Clear Anodized Bronze Anodized Powder Coat Paint Baked Enamel Paint

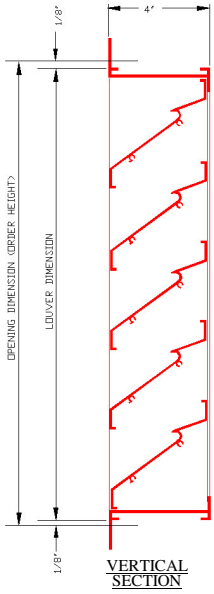

VERTICAL SECTION

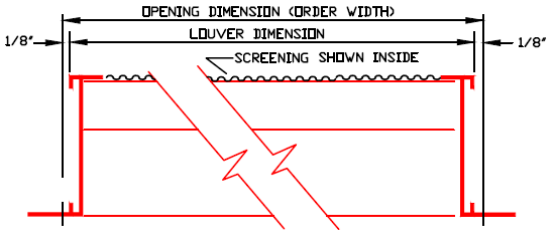

HORIZONTAL SECTION

231 Commerce Dr. Montgomeryville, PA 18936
Tel: 215-412-4445 Fax: 215-412-4409
Email: lloydind@firedamper.com

138 Industrial Loop West, Orange Park, FL 32073
Tel: 904-541-1655 Fax: 904-541-1657
Email: lloydind1@firedamper.com

B1, 4/F., Luen Ming Hing Factory Building
36 Mok Cheong St.,
To Kwa Wan, Kowloon, H. K.
Tel: 852-2760-4188 Fax: 852-2760-4177
Email: tatanlexyim@lloydasia.com

Website: www.firedamper.com

*ALL STATED SPECIFICATIONS ARE SUBJECT TO UPDATE WITHOUT NOTICE OR OBLIGATION.

Lloyd Industries Inc. 2017

#2 Chootoo Road, South Aranguez, San Juan, Trinidad